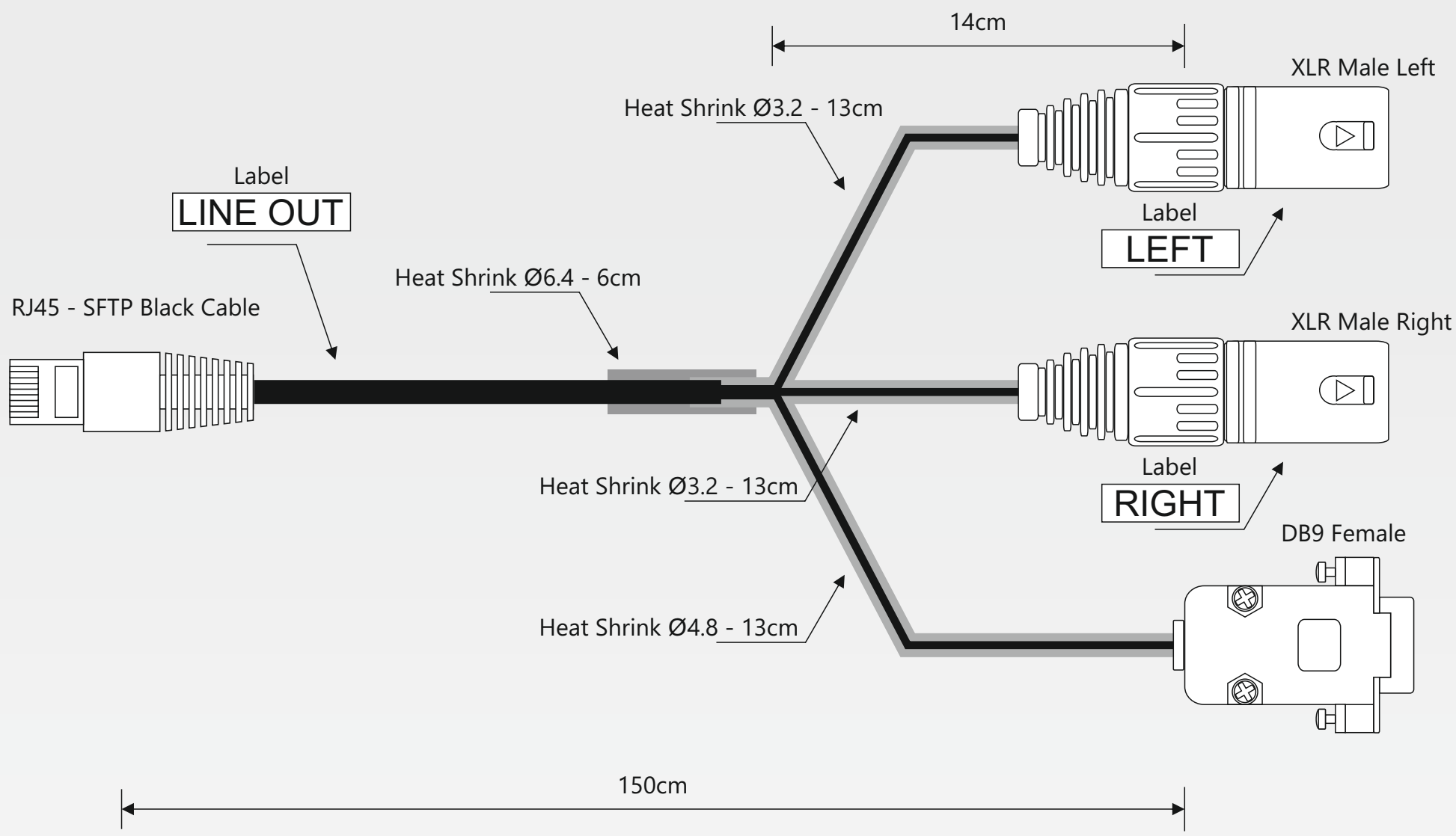

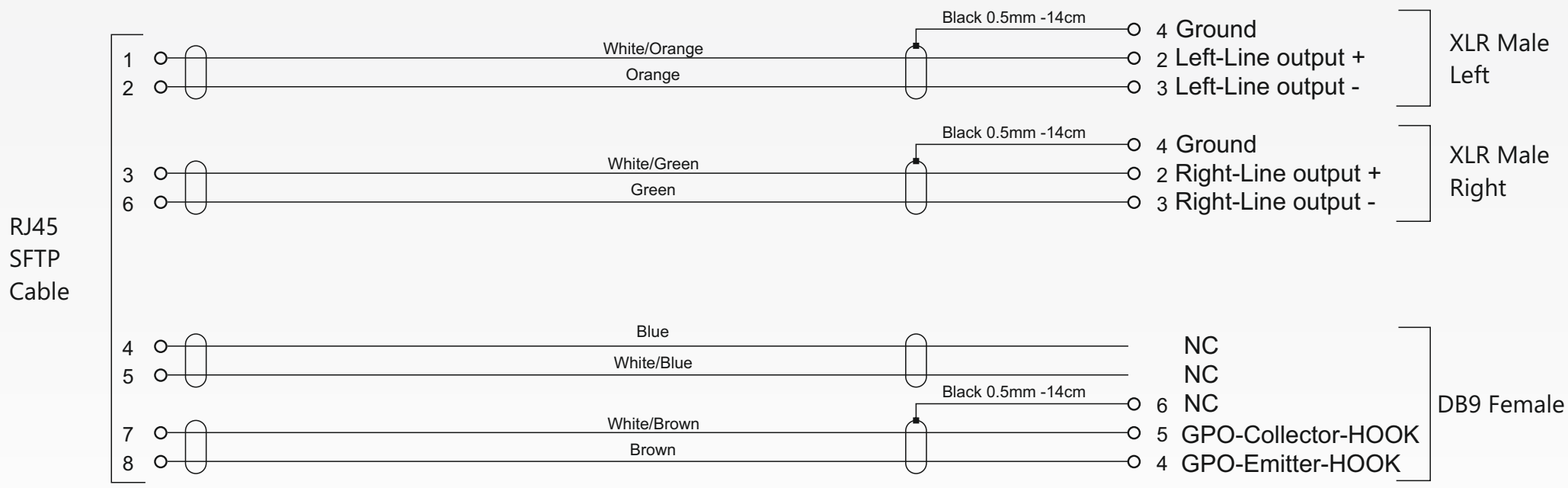

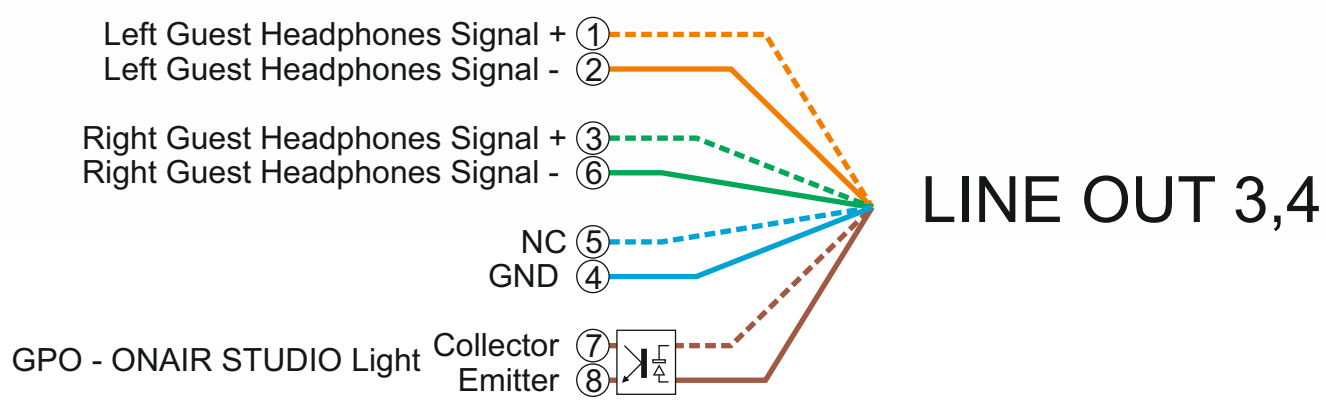

DESCRIPTION	Oxy1000/2000-RJ45 Line Out Cable	
OBJECT		
NOTE		
DATE 09-07-21		COD.190